Compact Proportional Solenoid Valve

PVQ Series

Repeatability: 3% or less

Hysteresis: 10% or less

Fluid	Flow rate control range Note)	Series
Air, Inert gas	0 to 6 L/min	**PVQ10**
	0 to 100 L/min	**PVQ30**

Note) Varies depending on the model.

Control the flow rate smoothly according to the current

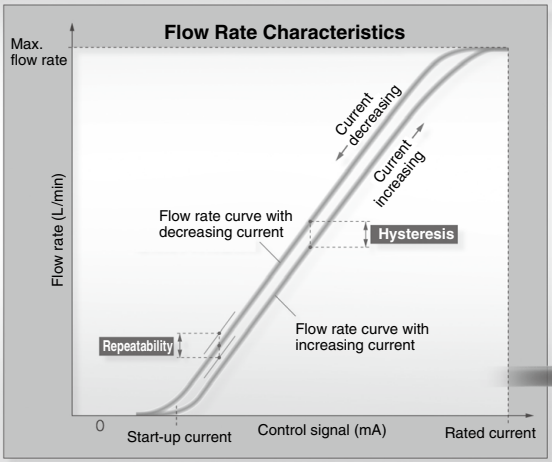

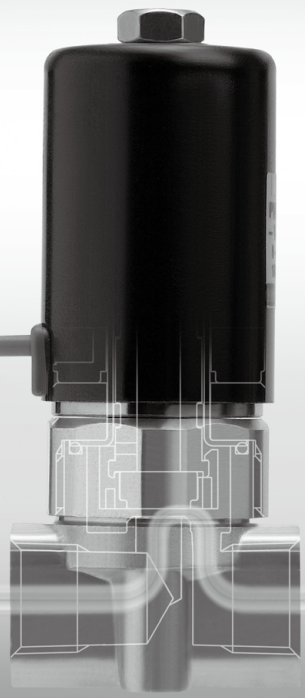

Service life: Lasts 25 million cycles. (PVQ30)
(SMC in-house life test conditions)

Specially coated sliding surface realized 25 million cycles within set operating range

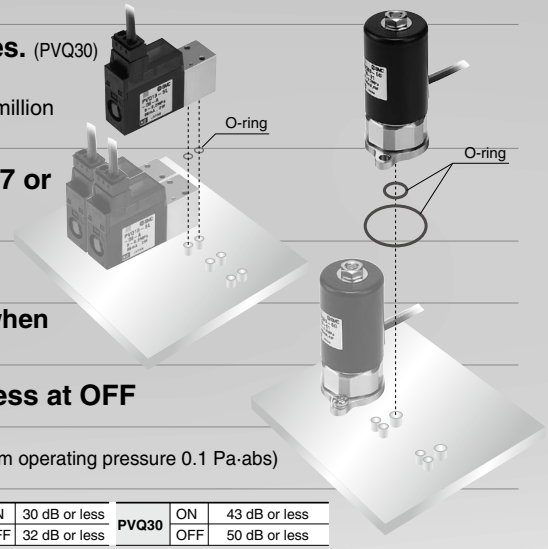

Body material: Equivalent to C37 or Stainless Steel 304 (PVQ30)

Seal material: FKM (PVQ10, PVQ30)

Valve returns to closed position when power supply is turned off.

Leakage amount: 5 cm³/min or less at OFF

Can be used with vacuum. (Minimum operating pressure 0.1 Pa·abs)

Operation noise during opening/closing of the valve reduced

PVQ10	ON	30 dB or less
	OFF	32 dB or less

∗ Background noise: 20 to 25 dB

PVQ30	ON	43 dB or less
	OFF	50 dB or less

∗ Background noise: 20 to 25 dB

Can be mounted on manifolds

When continuously energizing adjacent valves at the same time, ambient temperature rises since the coil generates heat. Implement measures to exhaust excess heat so that the temperature remains within the range of the table on the right.

Table: Coil outer surface temperature range

Model	Coil outer surface temperature
PVQ10	90°C or less
PVQ30	100°C or less

∗ Ambient temperature: 50°C at the valve proximal section (approx. 1 mm) when the maximum current is applied

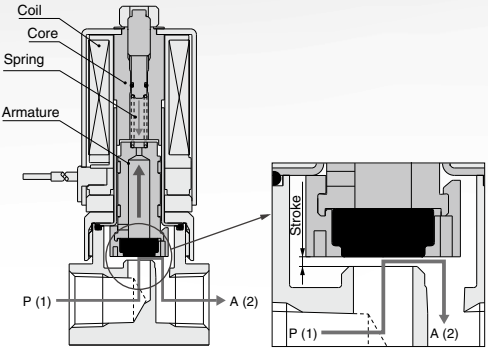

PVQ30

Working Principle

The armature is attracted to the core by electromagnetic force as the coil is energized.
When the applied current varies, the attraction force also varies proportionally to it.
The flow rate is controlled by the movement (stroke) of the armature, depending on the balance between this attraction force and the spring load.

Note) Sliding resistance at this point is the hysteresis of the flow.

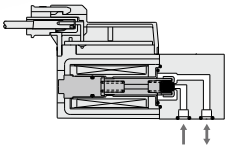

PVQ10

Proportional Solenoid Valve

Flow rate can be controlled smoothly with one proportional solenoid valve by current control.

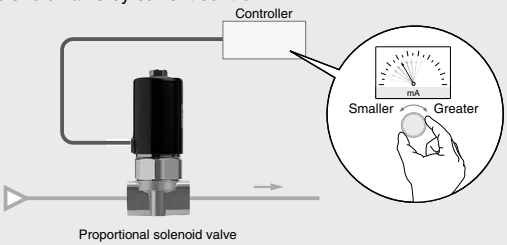

Current (2 port valve)

One 2-port valve is required for each flow rate.

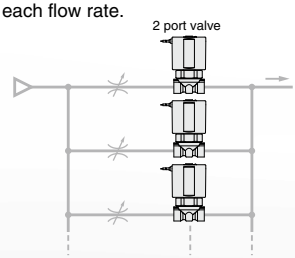

Applications

Air-blow

- Blow-off of debris or water.
  Work transportation

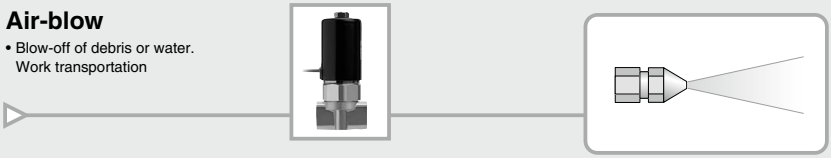

Spin control of handpiece

Blood pressure gauge

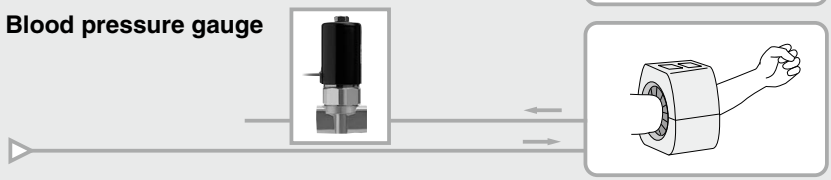

Vacuum chamber supply flow control

Smooth air supply/exhaust is possible by reducing the initial air supply.
Prevents dust being stirred up inside the chamber.

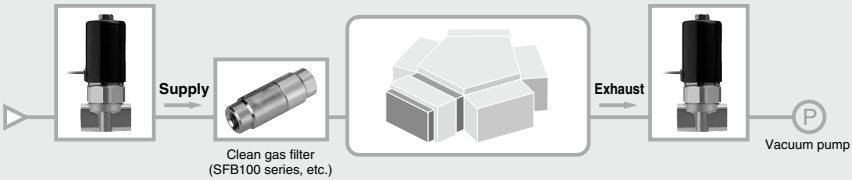

Model	PVQ13				PVQ31		PVQ33
Piping type	Base mounted				Body ported		Base mounted
					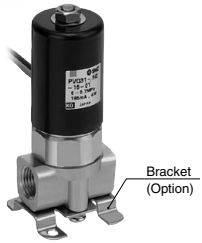		
Valve construction	Direct operated poppet				Direct operated poppet		
Valve type	N.C.				N.C.		
Orifice size (mm)	0.3	0.4	0.6	0.8	1.6	2.3	4
Max. operating pressure differential (MPa)	0.7	0.45	0.2	0.1	0.7	0.35	0.12
Flow rate (L/min)	0 to 5	0 to 6		0 to 5	0 to 100		0 to 75
Applied current (Power supply)	0 to 85 mA (24 VDC) 0 to 170 mA (12 VDC)				0 to 165 mA (24 VDC) 0 to 330 mA (12 VDC)		
Port size	M5				1/8		

Model Selection

ΔP = (P_1 – P_2) MPa
ΔP: Pressure differential
P_1: Inlet pressure
P_2: Outlet pressure

<To use orifice ø1.6 (See PVQ30: Chart 1)>

Condition 1. P_1 = 0.7 Mpa, P_2 = 0 MPa (Atmospheric pressure)

Refer to curve A when ΔP is 0.7 MPa.

Ex) At increasing current, the flow rate when 140 mA current is applied is 85 L/min. (See ①.)
If current decreases at this point, the flow rate may not change by 135 mA due to hysteresis. (See ②.)
The flow rate at increasing current and decreasing current are not the same due to hysteresis. (① 85 L/min., ③ 93 L/min.)

Condition 2. P_1 = 0.7 MPa, P_2 = 0.2 MPa

Refer to curve B when ΔP is 0.5 MPa.

Ex) At increasing current, the flow rate when 150 mA current is applied is 65 L/min. (See ④.)
If the outlet pressure P_2 increases by 0.15 MPa, ΔP decreases by 0.15 MPa and becomes 0.35 MPa (See curve C), and the flow rate when the same current is applied is 40 L/min. (See ⑤.)

- The flow rate decreases due to change (increase) in outlet pressure, even if the inlet pressure and current value are the same.

Condition 3. In a vacuum

- For vacuum specifications, the operating pressure range is from 0.1 Pa·abs to max. operating pressure differential.
- A(2) port is applicable with vacuum pressure.

<Chart 1> PVQ30 (ø1.6)

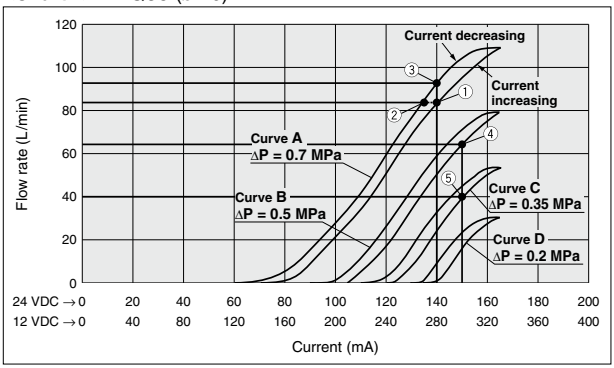

● Q. Required flow rate = 0 to 75 L/min.

P_1 = No conditions, P_2 = 0 MPa (Atmospheric pressure)

In this case, all orifice sizes of PVQ30 series satisfy the required flow rate. (Flow rate when rated current is applied) The table below shows the pressure differentials to satisfy the required flow rate. In the flow rate characteristics charts, a pressure differential over the flow rate indicated by the dashed line (75 L/min.) up to the max. operating pressure differential will satisfy the required flow rate.

Table. Pressure differential to satisfy required flow rate = 0 to 75 L/min.

	ø1.6	ø2.3	ø4.0
Pressure differential (ΔP)	0.5 to 0.7 MPa	0.25 to 0.35 MPa	0.12 MPa

$\Delta P = (P_1 - P_2)$ MPa
ΔP: Pressure differential
P_1: Inlet pressure
P_2: Outlet pressure

PVQ30 (ø1.6)

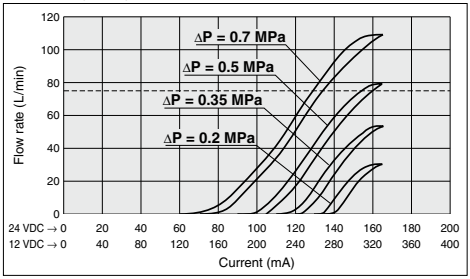

PVQ30 (ø2.3)

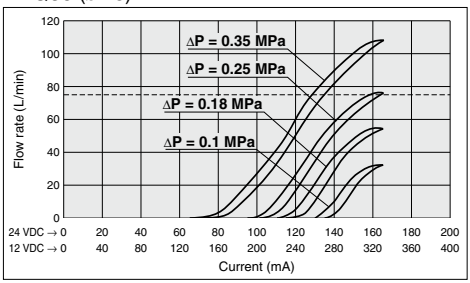

PVQ30 (ø4.0)

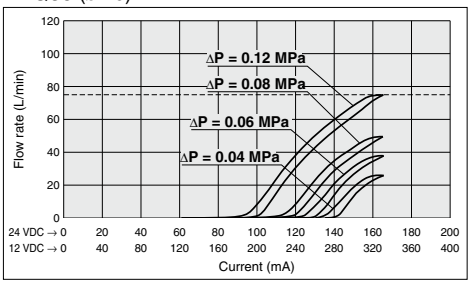

● Note

1) Follow the same procedure for selecting PVQ10 series.
2) Flow rate depends on individual differences between valves and piping conditions. Refer to flow rate characteristics chart to select the model with adequate margin for required flow rate.

Compact Proportional Solenoid Valve
PVQ10 Series

How to Order

Base mounted **PVQ 13 – 5 L – 03 – M5 – A**

Valve type

13	N.C.

Voltage

5	24 VDC
6	12 VDC

Electrical entry

L	L plug connector With lead wire (Length 300 mm)	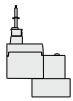
LO	L plug connector Without connector	
M	M plug connector With lead wire (Length 300 mm)	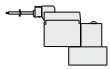
MO	M plug connector Without connector	

※ Refer to page 981 for the different lead wire lengths of L and M plug connectors.

Symbol

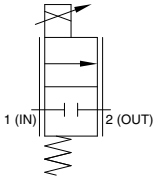

Body/Seal material

Symbol	Body	Seal
A	C36	FKM

Port size

Nil	Without sub-plate (with mounting screw M1.7 x 17L, 2 pcs.)	 Mounting screw
M5	With sub-plate M5 x 0.8	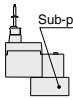 Sub-plate

Orifice size

Symbol	Orifice dia.	Max. operating pressure differential
03	0.3 mmø	0.7 MPa
04	0.4 mmø	0.45 MPa
06	0.6 mmø	0.2 MPa
08	0.8 mmø	0.1 MPa

Specifications

Standard specifications	Valve construction	Direct operated poppet	
	Fluid	Air	
	Seal material	FKM	
	Body material	C36	
	Fluid temperature	0 to +50°C	
	Ambient temperature Note 1)	0 to +50°C	
	Action	N.C. (Normally closed)	
	Mounting orientation	Unrestricted	
	Port size	M5	
Coil specifications	Power supply	24 VDC	12 VDC
	Coil current	0 to 85 mA	0 to 170 mA
	Power consumption	0 to 2 W	
	Coil insulation	Class B	

Characteristic specifications	Orifice diameter (mmø)	0.3	0.4	0.6	0.8
	Max. operating pressure differential (MPa) Note 2)	0.7	0.45	0.2	0.1
	Max. operating pressure (MPa)	1 MPa			
	Min. operating pressure (MPa) (Vacuum) Note 3)	0 (0.1 Pa.abs)			
	Flow rate (L/min) (at max. operating pressure differential)	0 to 5	0 to 6		0 to 5
	Hysteresis (at max. operating pressure differential)	10% or less			
	Repeatability (at max. operating pressure differential)	3% or less			
	Start-up current (at max. operating pressure differential)	50% or less			

Note 1) Indicates the ambient temperature when the valve is not energized.
When the valve is continuously energized (when applying maximum current) and the ambient temperature is kept at 50°C due to the convection of the air around the valve, the coil outer surface reaches approximately 90°C, and the coil proximal section (1 mm) reaches approximately 60°C. Use the product at a temperature of not more than 50°C.
※ Refer to the Specific Product Precautions "Continuous Energization."
Note 2) Maximum operating pressure differential indicates pressure differential (difference between inlet and outlet pressure) which can be allowed for operation with the valve closed or open. If the pressure differential exceeds the max. operating pressure differential of orifice, the valve may leak.
Note 3) For vacuum application, max. operating pressure range is 0.1 Pa·abs to max. operating pressure differential. A(2) port is applicable for vacuum pressure.

Flow Rate Characteristics

PVQ10 (ø0.3)

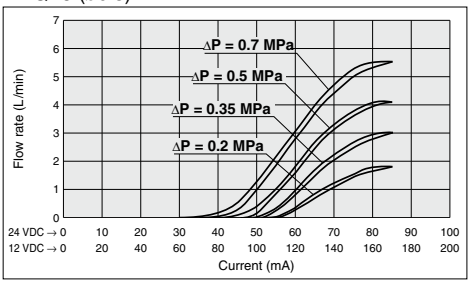

PVQ10 (ø0.4)

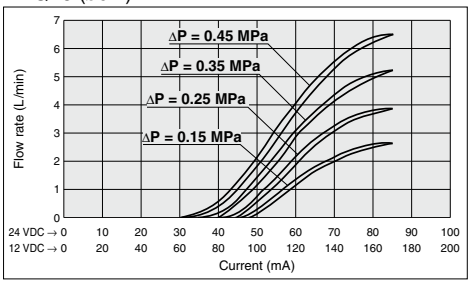

PVQ10 (ø0.6)

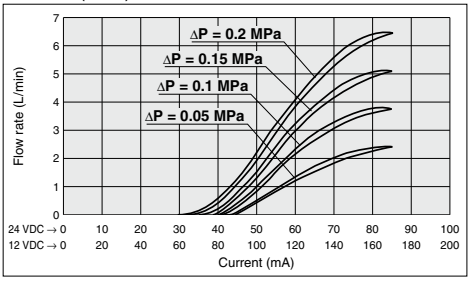

PVQ10 (ø0.8)

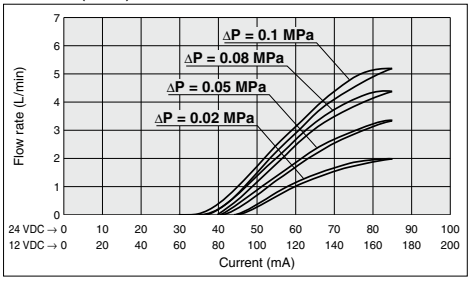

Note) Flow rate varies depending on model differences and piping conditions.
Select the model that fully satisfies the necessary flow rate based on the flow rate characteristics graphs.

Construction

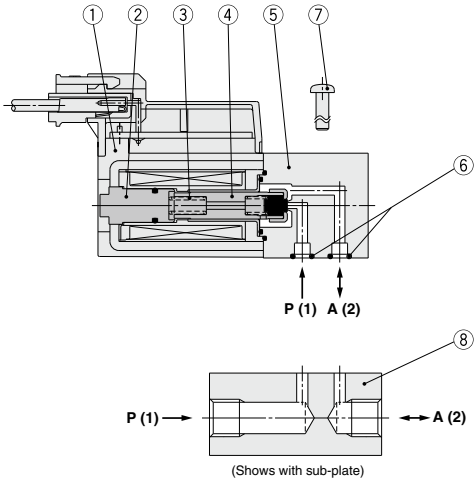

(Shows with sub-plate)

Component Parts

No.	Description	Material	Note
1	**Solenoid coil assembly**	—	
2	**Core**	Stainless steel	
3	**Return spring**	Stainless steel	
4	**Armature assembly**	Stainless steel, Aluminum, FKM	
5	**Body**	C36	
6	**O-ring**	FKM	
7	**Round head combination screw**	Steel	M1.7 x 0.35 x 17L, 2 pcs.
8	**Sub-plate**	C36	Part no: PVQ10-15-M5

*** Connector assembly**

AXT661 – 14A – □

Lead wire length

Nil	300 mm
6	600 mm
10	1000 mm
20	2000 mm
30	3000 mm

For the product with the lead wire, the lead wire length is 300 mm. To extend the lead wire length to 600 mm or more, select the valve without connector and order the connector assembly separately.

Dimensions

L plug connector
PVQ13-□L-□-M5

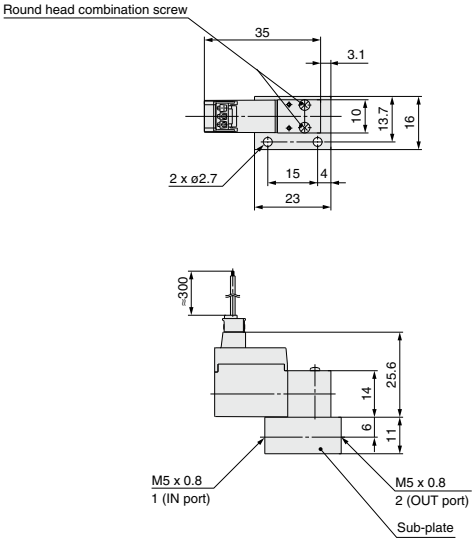

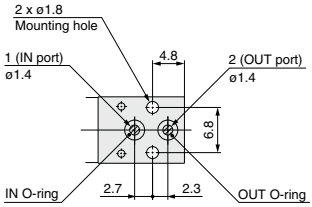

Interface

M plug connector
PVQ13-□M-□-M5

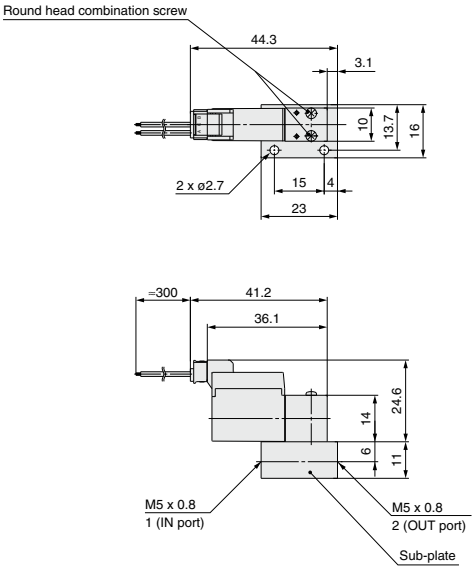

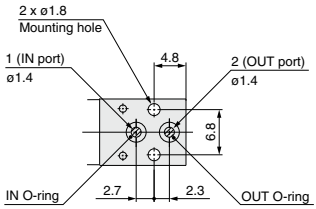

Interface

Compact Proportional Solenoid Valve
PVQ30 Series

How to Order

Body ported PVQ 31 – 5 G – 16 – 01 □ – □ – □

Base mounted PVQ 33 – 5 G – 16 – 01 □ – □

Valve type

31	N.C.

Port size

01	1/8 (6A)

Option

Nil	None
F	Foot bracket

∗ Bracket is not mounted but is provided at the time of shipment.

Valve type

33	N.C.

Voltage

5	24 VDC
6	12 VDC

Electrical entry: Grommet

Body/(Sub-plate) Seal material

Symbol	Body	Seal
Nil	C37	FKM
H	Stainless steel	

Thread type (with sub-plate)

Nil	Rc
F	G
N	NPT
T	NPTF

Symbol

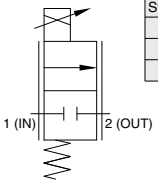

Orifice size

Symbol	Orifice dia.	Max. operating pressure differential
16	1.6 mmø	0.7 MPa
23	2.3 mmø	0.35 MPa
40	4 mmø	0.12 MPa

Port size

Nil	Without sub-plate (with mounting screw M3 x 8L, 2 pcs.)	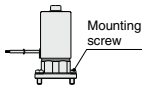
01	With sub-plate 1/8 (6A)	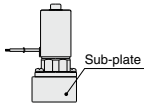

Specifications

Standard specifications	Valve construction	Direct operated poppet	
	Fluid	Air	
	Seal material	FKM	
	Body material	C37 (Standard), Stainless steel	
	Fluid temperature	0 to +50°C	
	Ambient temperature Note 1)	0 to +50°C	
	Action	N.C. (Normally closed)	
	Mounting orientation	Unrestricted	
	Enclosure	IP40	
	Port size	Rc 1/8	
Coil specifications	Power supply	24 VDC	12 VDC
	Coil current	0 to 165 mA	0 to 330 mA
	Power consumption	0 to 4 W	
	Coil insulation	Class B	

Note 1) Indicates the ambient temperature when the valve is not energized.
When the valve is continuously energized (when applying maximum current) and the ambient temperature is kept at 50°C due to the convection of the air around the valve, the coil outer surface reaches approximately 100°C, and the coil proximal section (1 mm) reaches approximately 70°C. Use the product at a temperature of not more than 50°C.
∗ Refer to the Specific Product Precautions "Continuous Energization."

Characteristic specifications	Orifice diameter (mmø)	1.6	2.3	4.0
	Max. operating pressure differential (MPa) Note 2)	0.7	0.35	0.12
	Max. operating pressure (MPa)	1 MPa		
	Min. operating pressure (MPa) (Vacuum) Note 3)	0 (0.1 Pa.abs)		
	Flow rate (L/min) (at max. operating pressure differential)	0 to 100		0 to 75
	Hysteresis (at max. operating pressure differential)	10% or less		13% or less
	Repeatability (at max. operating pressure differential)	3% or less		
	Start-up current (at max. operating pressure differential)	50% or less		65% or less

Note 2) Maximum operating pressure differential indicates pressure differential (difference between inlet and outlet pressure) which can be allowed for operation with the valve closed or open. If the pressure differential exceeds the max. operating pressure differential of orifice, the valve may leak.
Note 3) For vacuum application, max. operating pressure range is 0.1 Pa·abs to max. operating pressure differential. A(2) port is applicable for vacuum pressure.

Flow Rate Characteristics

Air

PVQ30 (ø1.6)

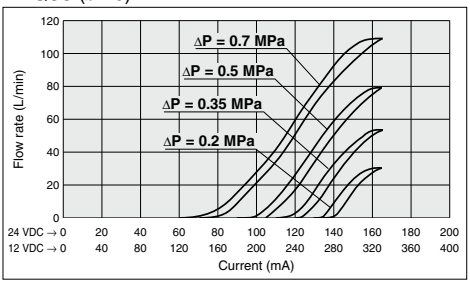

PVQ30 (ø2.3)

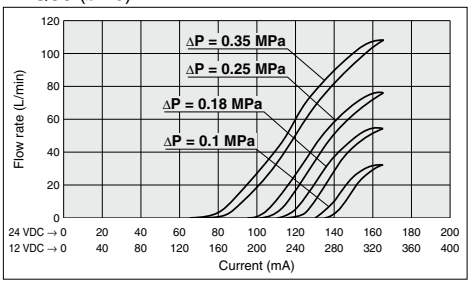

PVQ30 (ø4.0)

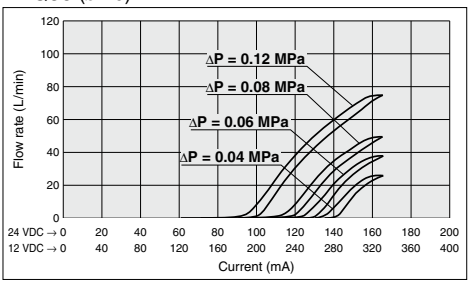

Note) Flow rate varies depending on model differences and piping conditions.
Select the model that fully satisfies the necessary flow rate based on the flow rate characteristics graphs.

Construction

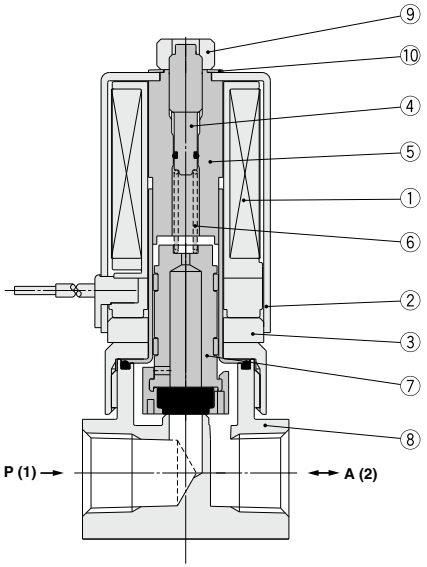

Component Parts

No.	Description	Material	Note	
1	**Solenoid coil assembly**	—		
2	**Coil cover**	SPCE		
3	**Magnetic plate**	SUY		
4	**Adjusting screw**	Stainless steel		
5	**Tube assembly**	Stainless steel		
6	**Return spring**	Stainless steel		
7	**Armature assembly**	Stainless steel, PPS, PTFE, FKM		
8	**Body**	C37 or Stainless steel		
9	**Nut**	Steel		
10	**Wave washer**	Stainless steel		
11	**Round head combination screw**	Copper	Base mounted only	M3 x 0.5 x 8L, 2 pcs.
12	**Sub-plate**	C36 or Stainless steel		Part no.: PVQ30-15□-01□
13	**O-ring**	FKM		
14	**O-ring**	FKM		

Option (Body ported only)

- **Bracket assembly: VDW20-15A-1**

Sub-plate Part No.

PVQ30-15 □ -01 □

- **Thread type**
- **Material**

C	C36
S	Stainless steel

Dimensions

PVQ31

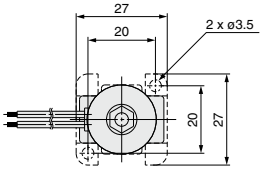

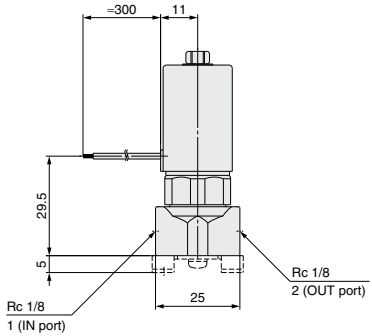

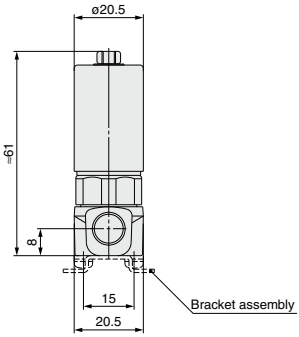

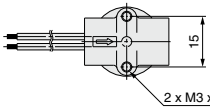

PVQ33

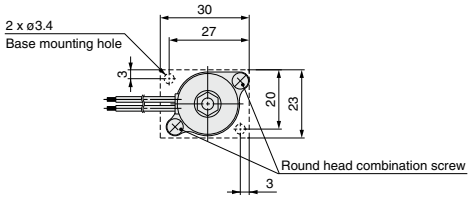

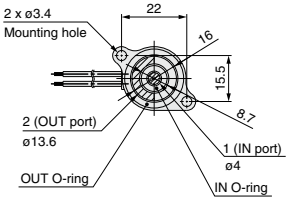

Interface

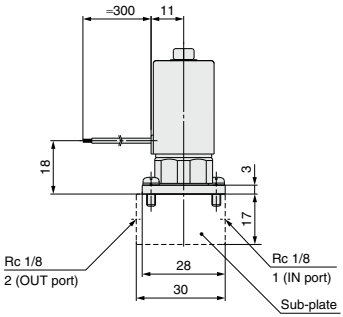

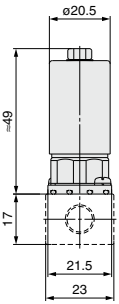

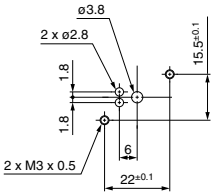

Machining dimension of base side

Glossary

■ Proportional control

Control the fluid proportionally according to input signal (current).

■ Max. operating pressure differential

Indicates max. pressure differential (difference between inlet and outlet pressure) which is allowed for operation with the valve closed or open.

■ Max. operating pressure

This indicates the limit of pressure that can be applied to the inlet. (The pressure differential of the proportional valve must be no more than the maximum operating pressure differential.)

■ Orifice diameter

Diameter of the hole for sealing the valve body of the proportional valve. This does not indicate the effective cross section.

■ Hysteresis

Greatest flow rate difference between current increase and current decrease (with the same current).
(Percentage divided by max. flow rate)

■ Repeatability

Deviation of output flow rate when the same current is applied.
(Percentage divided by max. flow rate)

■ Start-up current

Current at which the flow rate is actually output while increasing current from zero.
(Percentage divided by rated current)

PVQ Series
Specific Product Precautions

Be sure to read this before handling the products.
Refer to back page 50 for Safety Instructions.

Power Source Selection

⚠ Caution

This product makes proportional control possible with constant current.

If controlled with voltage, the output flow rate cannot be kept constant due to current fluctuation. Use stable DC power source of sufficient capacity without much ripple.

Handling

⚠ Caution

1. **This product is adjusted to the respective specifications at SMC factory before delivery.**
   Do not disassemble the product or remove parts as it could cause breakdown of the product.
2. **Flow rate is controlled by balancing the valve body.**
   Do not expose the product to external vibration and impact as it changes the flow rate.
   Vibration may occur depending on the piping conditions or control methods.

Pressure Difference

⚠ Caution

Leakage from the valve may be caused if the pressure difference is larger than the maximum operating pressure differential of the respective models.

Flow Rate

⚠ Caution

Flow rate varies depending on model differences and piping conditions.
Select the model that fully satisfies the necessary flow rate based on the flow rate characteristics graphs.

Operation in Vacuum

⚠ Caution

When the product is used in vacuum, apply vacuum pressure to A (2) port.

The pressure at P(1) port should be larger than the pressure at A(2) port.

Valve Mounting

⚠ Caution

When mounting a valve to the sub-plate, tighten the screw securely with the tightening torque shown in the table below after checking the installation condition of the O-ring on the interface side.

Proper Tightening Torque (N•m)

PVQ10 (Base mounted)	PVQ30 (Base mounted)
0.15 to 0.22	0.8 to 1.0

Continuous Energization

⚠ Warning

1. **Ambient temperature and outer surface temperature**
   When the valve is continuously energized (when applying maximum current) and the ambient temperature is kept at 50°C due to the convection of the air around the valve, the coil outer surface reaches approximately 90°C for the PVQ10 series and 100°C for the PVQ30 series.
   The valve proximal section (approx. 1 mm) reaches approximately 60°C for the PVQ10 series and 70°C for the PVQ30 series.
   When the valve is mounted inside the enclosed control panel (in a state without convection of air), however, the above temperature may be exceeded due to the rise in coil temperature or the influence of other equipment. Take measures to release the heat, for example, to create a convection of the air around the valve or provide an air vent.
2. **Do not touch the valve directly with hands. The coil can be hot depending on the ambient temperature or energizing time.**
   Install a protective cover over the valve if it can be touched directly with hands.